EasySafe Downlighter - obsolete

The EasySafe range of surface-mount luminaires offers a simple method of providing discrete emergency lighting in areas that require a robust surface-mounted self-contained solution. Available with a symmetrical wide angle lens or an asymmetrical 'corridor' lens for escape routes. The luminaire simply requires an addressable wiring connection to the LuxIntelligent panel to provide effective non-maintained emergency lighting with a 3-hour duration. The LED-Lite fully supports all features of the LuxIntelligent test system.

Operation

The EasySafe downlighter is supplied with integral non-maintained emergency lighting addressable control gear. The self-contained unit offers 3-hour emergency lighting duration from integral nickel-metal hydride batteries. The EasySafe downlighter incorporates a high-brightness green LED into the white polycarbonate bezel to provide battery charge and luminaire healthy indication. The luminaires will automatically provide emergency lighting in the event of a loss of local mains supply (monitored by the LuxIntelligent panel at source). The benefits of modern LEDs are well documented.

Installation

The EasySafe downlighter units are easily installed, base first, just like standard fire detectors. There is no local mains feed required, reducing costs from both labour and materials requirements. When the 'corridor' lens is specified and installed, the LED component can easily be rotated in situ, to align the distribution along the escape route.

Features

- Fully compatible with LuxIntelligent test system
- Available as open area or 'corridor' options
- Reliable LED technology
- Powered from the LuxIntelligent data loop at 32V DC
- No 230V connection required
- Excellent spacing values
- Discrete surface-mounted LED luminaire
- Robust construction
- Simple 'first fix' bases

Specification

Supply voltage	Low voltage (32V)
Operating voltage	18-32V
Quantity	Up to 50 EasySafe type luminaires per loop
Light source	3W White LED
Cable termination	14/16 AWG, 1.3/2.0mm^2
Body	PC/ABS 2950
Colour	White body (RAL9003) & Grey Base (Pantone 429)
Dimensions (H*W*D)	120 (diameter) * 43 (height) (mm)
Weight	0.229Kg (including batteries)
Lumens	50lm

Order Codes and Options

ESL/O:	Surface mount addressable LED downlighter with 3 hour non-maintained 3W LED in white, including base and batteries
ESL/C:	Surface mount addressable LED downlighter with 3 hour non-maintained 3W LED in white, including base and batteries complete with 'corridor' lens
ESL/B:	Standard downlighter replacement base
ESL/BP:	Replacement downlighter replacement battery pack

Spacing Data

	Open-Area (0.5Lux)		Corridor (1.0Lux, 2m wide corridor)	
Mounting Height (m)	Spacing to wall (m)	Spacing between (m)	Spacing axial to wall (m)	Spacing between (m)
2.00	2.30	7.40	4.50	13.00
2.50	2.40	8.10	2.35	12.70

Corridor Lens Version

Base

Local Lighting Circuit Monitoring (uses LXP-110)

The LuxIntelligent Input/Output Module (LXP-110) is a loop powered device that can be programmed to trigger specific groups of luminaires on the same loop. To trigger EasySafe luminaires when there is a loss of power to regular lighting, it is possible to connect to the local lighting circuit via a 240V relay (sold separately) and connecting the LXP-110 to the COMMON and NORMALLY OPEN terminals of the 240V Relay via the switch inputs as shown below:

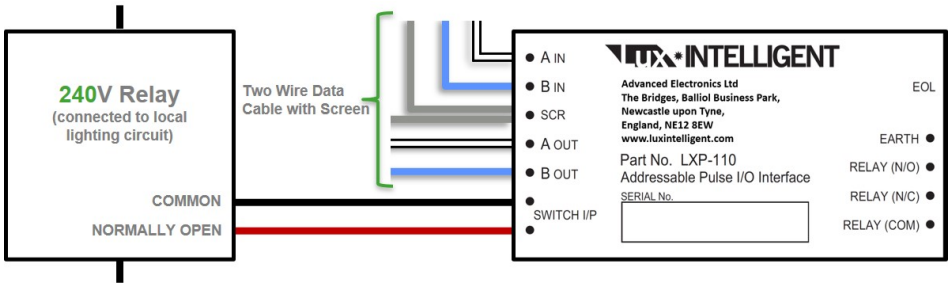

Dimensions and Rotating Lens

The rotating lens is applicable to the Corridor Lens version only. The lens can be rotated after final fitment to the first fix base to ensure correct alignment of the LED lens in the direction of travel in a given escape route.

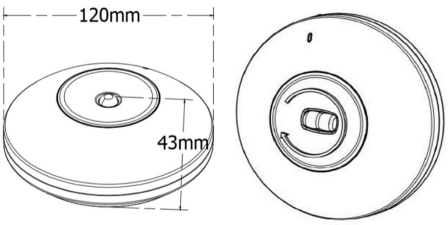

Advanced, The Bridges, Balliol Business Park, Newcastle, NE12 8EW, UK T: +44 (0)1670 707 111 E: enquiries@luxintelligent.com W: www.luxintelligent.com

As our policy is one of constant product improvement the right is therefore reserved to modify product specifications without prior notice.

EasySafe Escape Sign Luminaire - obsolete

The EasySafe escape sign is a reliable, attractive product that offers excellent performance with long life and low energy benefits. Its versatile design allows it to be both wall and ceiling mounted. The legends are available with a choice of directions and formats (European or ISO). Although smaller than conventional fluorescent exit signs, the EasySafe exit luminaire still provides a useful 25-metre viewing distance, in both mains and emergency modes. The EasySafe luminaire fully supports the self-testing features of the Lux Intelligent test system and complies with all the relevant requirements of EN60598.2.22. Since it is totally powered via the LuxIntelligent panel, it uses the LuxIntelligent I/O peripheral to monitor local power distribution boards to allow the lights to react in the event of power outages.

Operation

The luminaire is available only as a maintained fitting with low illumination under normal conditions, making it useful in such applications as cinemas and theatres. In the event of a power outage, the illumination switches to maximum output, providing clear direction towards exits. The EasySafe luminaire uses state-of-the-art reflective screens to ensure the LEDs evenly illuminate the safety sign legend. Luminaires are supplied with integral maintained emergency control gear, which ensure that in the event of a power failure, the exit sign continues to operate with the same level of luminance for three hours from the internal NiMH battery.

Installation

The EasySafe luminaires are easily installed, base first, just like fire detection devices. The luminaire body simply clicks in place when required. A small screw can be used to fix the hanging angle, depending on wall or ceiling fixing. There is no local mains feed required, reducing both labour and material costs.

Features

- Fully compatible with LuxIntelligent test system
- Powered from the LuxIntelligent data loop at 32V DC
- No 230V connection required
- Long life and low energy performance LED technology
- Fully complies with all aspects of EN60598.2.22
- Viewing distance 25m
- Low maintained luminance level ideal for use in cinemas and theatres

Specification

Supply voltage	Low voltage (32V)
Operating voltage	18-32V
Quantity	Up to 50 EasySafe type luminaires per loop
Light source	High output white LEDs
Cable termination	15/16 AWG, 1.3/2.0mm^2
Body	PC/ABS 2950
Colour	White body (RAL9003), grey base & bracket (Pantone 429)
Dimensions	301 (L) * 212 (H) * 80 (D) (mm)
Weight	0.738Kg (including battery pack)
Batteries	4 AAA NiMH 4.8V 600mAH pack
Viewing distance	25m

Order Codes and Options

ESXL/ECAU:	Standard 3 hour maintained escape sign complete with arrow up EC format legend, base and battery pack
ESXL/ECAD:	Standard 3 hour maintained escape sign complete with arrow down EC format legend, base and battery pack
ESXL/ECAL:	Standard 3 hour maintained escape sign complete with arrow left EC format legend, base and battery pack
ESXL/ECAR:	Standard 3 hour maintained escape sign complete with arrow right EC format legend, base and battery pack
ESXL/ISOAU:	Standard 3 hour maintained escape sign complete with arrow up ISO format legend, base and battery pack
ESXL/ISOAD:	Standard 3 hour maintained escape sign complete with arrow down ISO format legend, base and battery pack
ESXL/ISOAL:	Standard 3 hour maintained escape sign complete with arrow left ISO format legend, base and battery pack
ESXL/ISOAR:	Standard 3 hour maintained escape sign complete with arrow right ISO format legend, base and battery pack

Ceiling Mount Dimensions

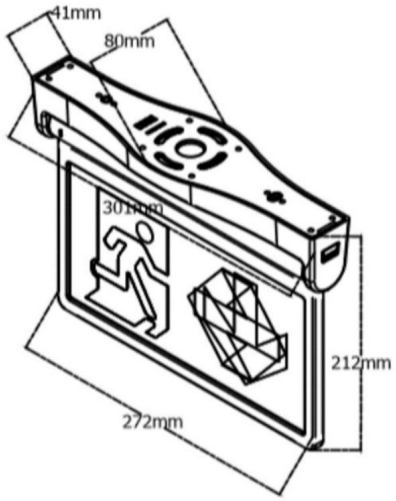

Wall Mount Dimensions

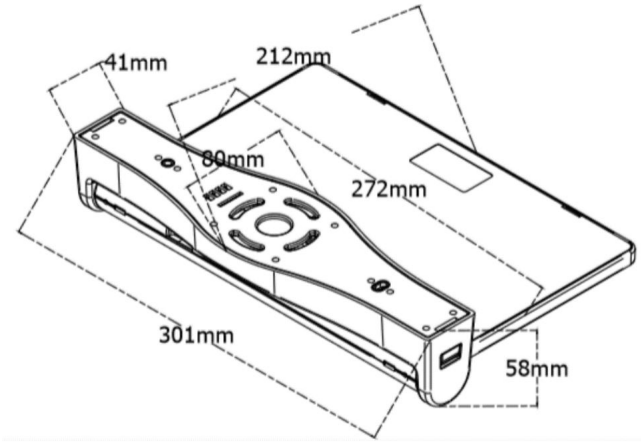

Local Lighting Circuit Monitoring (uses LXP-110)

The LuxIntelligent Input/Output Module (LXP-110) is a loop powered device that can be programmed to trigger specific groups of luminaires on the same loop. To trigger EasySafe luminaires when there is a loss of power to regular lighting, it is possible to connect to the local lighting circuit via a 240V relay (sold separately) and connecting the LXP-110 to the COMMON and NORMALLY OPEN terminals of the 240V Relay via the switch inputs as shown below:

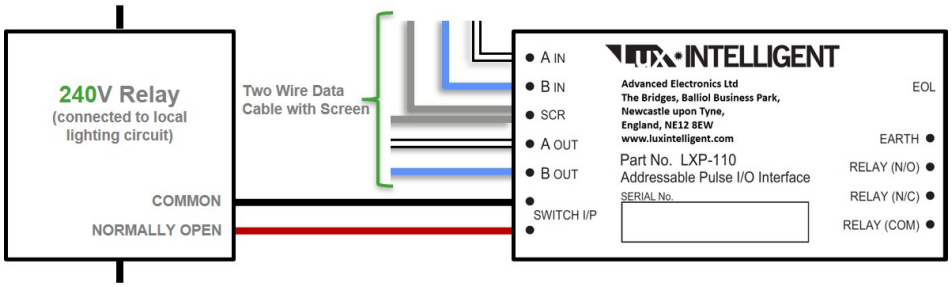

Mounting Bracket/Base

The EasySafe escape sign simply 'press and clicks' onto the fast installing first fix base with power being drawn via the data cable terminal block on the base to charge the local back-up batteries:

Advanced, The Bridges, Balliol Business Park, Newcastle, NE12 8EW, UK T: +44 (0)1670 707 111 E: enquiries@luxintelligent.com W: www.luxintelligent.com

As our policy is one of constant product improvement the right is therefore reserved to modify product specifications without prior notice.