Axis AX

80W Audio Amplifier Module

The Advanced AV-AMP-80 module provides Digital Audio capabilities to Axis AX “V” Series, Axis AX Command Centers and the AV-VB Distributed Audio Booster. The module provides two Class A or B 40 Watt Audio Notification Appliance Circuits (ANACs). Communications with an Axis AX panel is achieved through the use of the AX-CTL onboard PBUS (RS485 network) interface port. This interface is used for control of the module including the selection of the 16-channel flash-based digital messages, message repeat cycles, activation of the audio output, and monitoring of any AV-AMP-80 trouble condition.

The module also includes the capability to be externally triggered by three (3) programmable dry contact inputs. Trigger 1 causes message one to be played. Trigger 2 causes message two to be played. Trigger 3 has the highest priority and activates booster mode. In booster mode, signals appearing at “AMP 1 Booster Audio Input” and “AMP 2 Booster Audio Input” are amplified up to 25 Vrms levels and are amplified out the two audio notification appliance circuits. Trigger 3 overrides Triggers 1 and 2 to support higher priority paging. For installations requiring local paging, the AV-AMP-80 module includes a 6-pin ribbon cable connection that easily interfaces to the Advanced AV-MIC microphone.

The AV-AMP-80 module includes a field programmable 16 channel message generator, programmable through the Advanced audio module field configuration tool. The 16 messages are stored in onboard E2 memory. The PC-NeT tool is required for programming all Axis AX Series FACPs, annunciators, network options and the AV-AMP-80 control-by-event logic.

There are two (2) 40 Watt amplifiers that output identical messages simultaneously. A programming option provides for selecting a 1 to 1 backup (may be required in some jurisdictions). “Booster” configuration is provided by use of the AMP audio I/O terminals. This is ideal for synchronizing audio signals and sharply reducing installation costs.

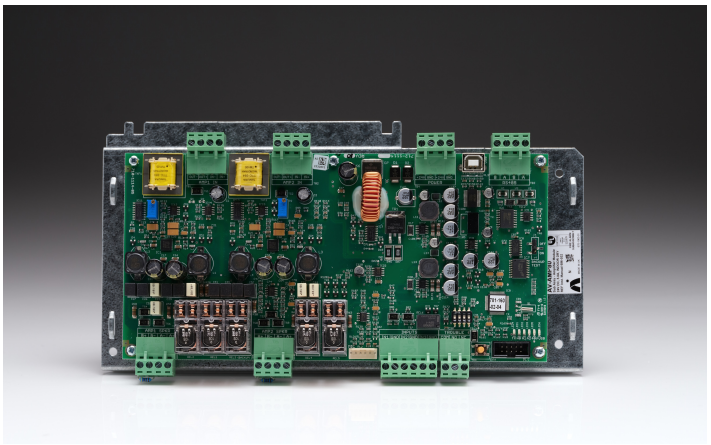

Features

- Dual 40 Watt @ 25 Vrms Amplifiers
- 16-Channel Digital Message Generator
- PC-NeT Programmable
- Unique “Booster” Option
- Compact/Efficient Digital Amplifier Design
- Class A or B Wiring
- Isolated PBUS (RS-485 Network) Interface
- Freely Programmable CBE logic
- PC-NeT Configuration Tool Compatible
- Automatic one-to-one Backup Option
- Supervised Microphone Input for AV-MIC Module
- Three Programmable External Trigger Inputs
- Up to 16 Amplifiers per FACP

Listings and Approvals

- Certified to UL864 10th Edition – File No. S35979
- CSFM Approved: Pending
- NYCFD COA: Pending

Wiring Diagram

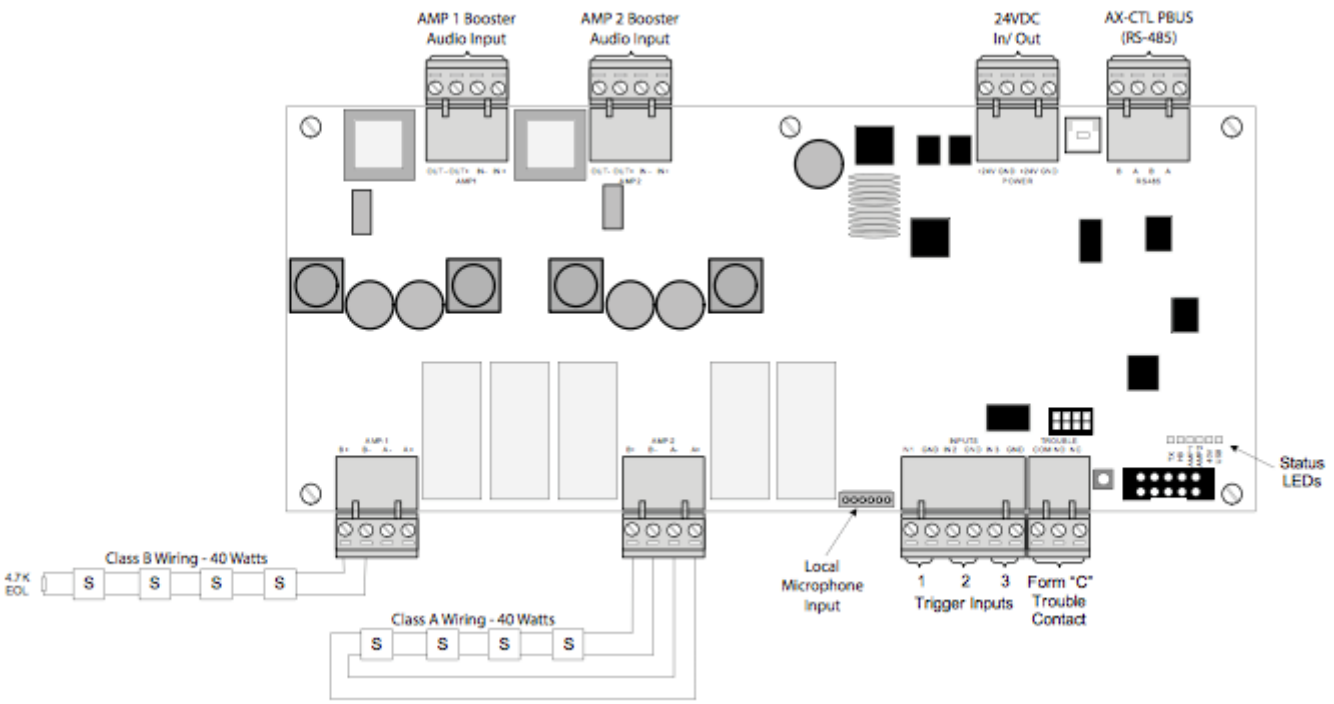

Specification

Input Voltage (DC)	24 VDC (Operating Range 15-30 VDC)
Current	50mA (Quiescent) 220mA Plus 51mA per 1 Watt of audio (maximum 3.4A @ 80 Watts)
Amplifier #1 Output	40 Watts @ 25 Vrms, Class A or B Wiring
Amplifier #2 Output	40 Watts @ 25 Vrms, Class A or B Wiring
Activation	RS-485 or Contact Closures (Triggers #1, #2 and #3)
AV-MIC	Supervised Microphone Input
Printed Circuit Board Dimensions	9'' Long X 4.25" Wide

Order Codes and Options

AV-AMP-80	Audio Amplifier Module with Two 40 Watt Speaker Outputs
AV-MIC*	Microphone and Enclosure Assembly
AV-VB*	Distributed Audio Booster. Includes One AV-AMP-80, One AX-PSU-6, and Enclosure

* For the gray enclosure, add the suffix "G" to the part number.

Advanced, The Bridges, Balliol Business Park, Newcastle upon Tyne, NE12 8EW, UK T: +44 (0)345 894 7000 E: enquiries@advancedco.com
W: www.advancedco.com

As our policy is one of constant product improvement the right is therefore reserved to modify product specifications without prior notice.