EvacGo

# Open-Area Conventional Wall Sounder

The EvacGo open-area conventional wall sounder can be used as either a standalone conventional device or as a loop-powered intelligent unit with the addition of our addressable sounder interface module (Axis-WSM).

The device is capable of reproducing 32 tones with a high sound output capability and four volume settings. These can be selected by a DIP switch at the back of the sounder body.

Standard and alternative tones are available for each setting which can be selected via the control panel programming when used with the intelligent interface (Axis-WSM) or wiring connections if used as a conventional standalone unit.

Low current consumption and compact design gives a wide-angle uniform sound distribution providing good audibility in all directions. The sounder is easy to install and incorporates built in short circuit loop isolation.

## Features

- Flexible modular design
- Approved for outdoor use to EN54-3 (Type B)
- 32-tone settings
- Wide angle uniform sound distribution
- Weatherproof to IP65
- Easy to install
- High sound-output capability
- 4 adjustable volume settings
- Robust with high reliability
- Available in red (Axis-CWS) or white (Axis-CWS/W)

## Dimensions

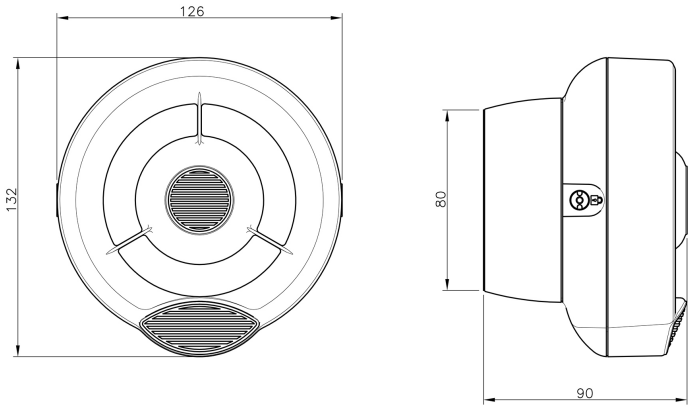


## Standards and Approvals

- EN54-3:2001 +A1:2002 +A2:2006

## Specification

| | |
|---|---|
| Power supply (*) | 15 to 40 Vdc |
| Alarm current consumption (volume set to HIGH and dependent upon tone selected) | 5-8 mA |
| Audible frequency range (dependent upon tone selected) | 440 Hz - 2900 Hz |
| Maximum sound output (volume set to HIGH) | 100 dB(A) ±3 dB(A) |
| Operating temperature range (no icing) | -25°C to +70°C |
| Maximum humidity (non condensing) | 95% RH |
| Depth (base) | 90 mm (35mm) |
| Diameter | 132 mm |
| Weight (base included) | 270 g |
| IP rating* | 21 |
| IP rating (not certified) | 65 |

(*) Independently assessed and certified to IPX5 (not part of the current EN54-3 certification)

**Conventional Wall Sounder Volume Range**

| Specification | Min | Typical | Max | Units | Notes |
|---|---|---|---|---|---|
| Numbers of tones | - | 32 | - | - | |
| Sound output. HIGH volume | 97 | 100 | 103 | dB(A) | Tone 3 |
| Sound output LOW volume | 85 | 88 | 91 | dB(A) | Tone 3 |
| Operating frequency range | 440 | - | 2900 | Hz | |

The four volume settings are roughly evenly spread between the Min and Max levels.

## Order Codes and Options

| | |
|---|---|
| AXIS-CWS | Open-area conventional wall sounder - Red |
| AXIS-CWS/W | Open-area conventional wall sounder - White |
| AXIS-WSM | Addressable sounder interface module |

Advanced, The Bridges, Balliol Business Park, Newcastle upon Tyne, NE12 8EW, UK T: +44 (0)345 894 7000 E: enquiries@advancedco.com
W: www.advancedco.com

As our policy is one of constant product improvement the right is therefore reserved to modify product specifications without prior notice.

EvacGo

# Open-Area Conventional Wall Sounder Beacon

The EvacGo open-area conventional wall sounder beacon can be used as either a standalone conventional device or as a loop-powered addressable unit with the addition of an intelligent addressable sounder interface module (Axis-WSM).

The device is capable of reproducing 32 tones with a high sound output capability and four volume settings. These can be selected by a DIP switch at the back of the sounder body.

Standard and alternative tones are available for each setting which can be selected via the control panel programming when used with the intelligent interface (Axis-WSM) or wiring connections if used as a conventional standalone unit.

There is a silent sounder setting if beacon-only use is required. The unit also has a high output LED beacon.

Low current consumption and compact design gives a wide-angle uniform sound distribution providing good audibility in all directions. The sounder is easy to install and incorporates built in short circuit loop isolation.

## Features

- Flexible modular design
- Approved for outdoor use to EN54-3 (Type B) and EN54-23
- 32-tone settings
- High output LED beacon
- Wide angle uniform sound distribution
- Weatherproof to IP65
- Easy to install
- High sound-output capability
- Silent sounder setting for beacon-only use
- 4 adjustable volume settings
- Robust with high reliability
- Available in red (Axis-CWSV) or white (Axis-CWSV/W)

## Standards and Approvals

- EN 54-3:2001+A1:2002+A2:2006
- EN 54-23:2010

## Dimensions

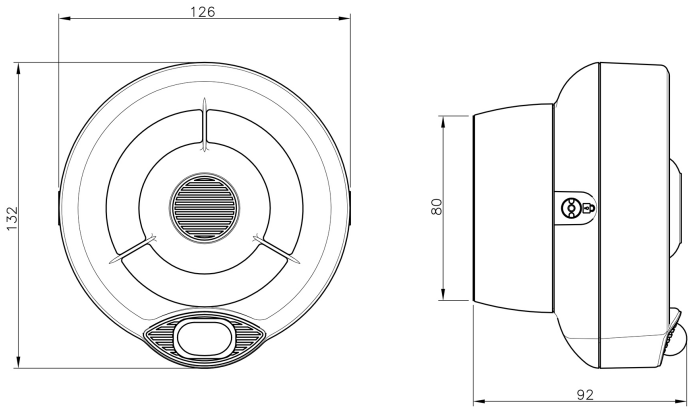

## Specifications

| | |
|---|---|
| Power supply(*) | 15 to 40 Vdc |
| Alarm current consumption (volume set to HIGH and dependent upon tone selected) | 12 mA - 26 mA |
| Audible frequency range (dependent upon tone selected) | 440 Hz - 2900 Hz |
| Maximum sound output (volume set to HIGH) | 100 dB(A) ± 3 dB(A) |
| Visual alarm device (VAD) frequency | 0.5 Hz |
| Visual alarm device (VAD) coverage | W 2.5-7 (122.5m³) |
| Operating temperature range (no icing) | -25°C - +70°C |
| Maximum humidity (non condensing) | 95% RH |
| Depth (base) | 90 mm (35 mm) |
| Diameter | 132 mm |
| Weight (base included) | 290 g |
| IP rating | 21 |
| IP rating (not certified)* | 65 |

(*) Independently assessed and certified to IPX5 (not part of the current EN54-3 certification)

**Conventional Wall Sounder Beacon Volume Range**

| Specification | Min | Typical | Max | Units | Notes |
|---|---|---|---|---|---|
| Numbers of tones | - | 32 | - | - | |
| Sound output. HIGH volume | 97 | 100 | 103 | dB(A) | Tone 3 |
| Sound output LOW volume | 85 | 88 | 91 | dB(A) | Tone 3 |
| Operating frequency range | 440 | - | 2900 | Hz | |

The four volume settings are roughly evenly spread between the Max and Min levels.

## Order Codes and Options

| | |
|---|---|
| AXIS-CWSV | Open-Area Wall Sounder Beacon - red |
| AXIS-CWSV/W | Open-Area Wall Sounder Beacon - white |
| AXIS-WSM | Addressable sounder interface module |

Advanced, The Bridges, Balliol Business Park, Newcastle upon Tyne, NE12 8EW, UK T: +44 (0)345 894 7000 E: enquiries@advancedco.com
W: www.advancedco.com

As our policy is one of constant product improvement the right is therefore reserved to modify product specifications without prior notice.